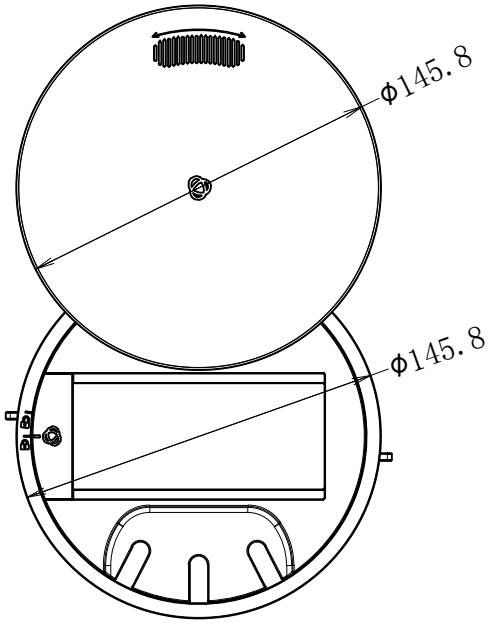

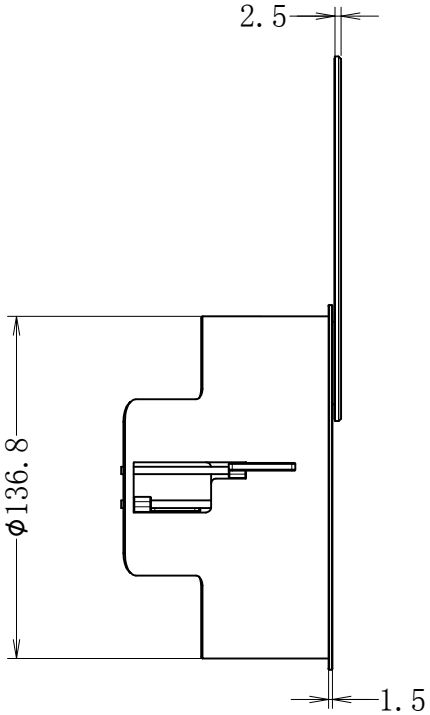

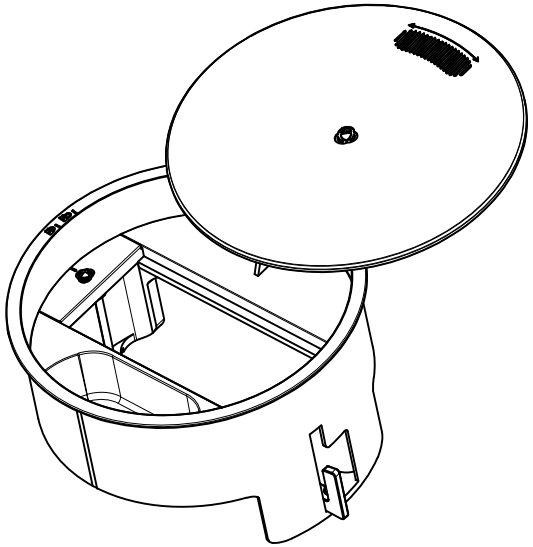

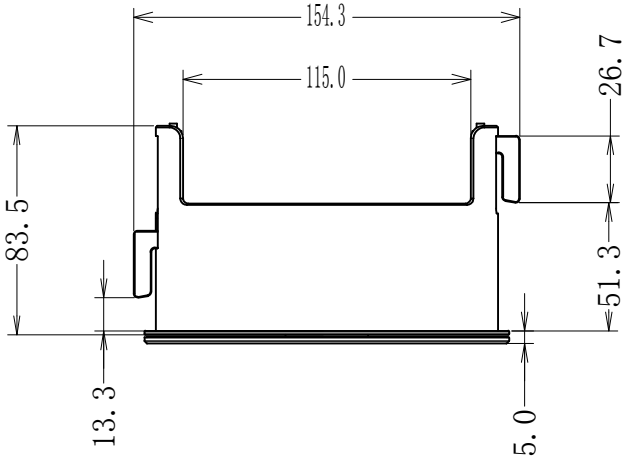

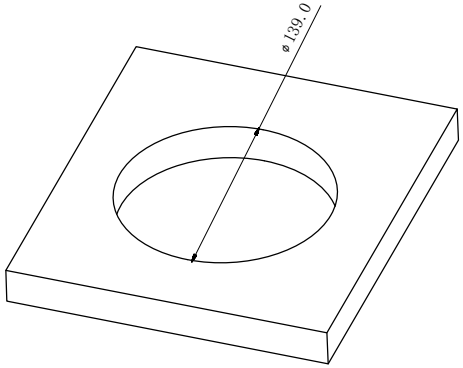

	REV1 2900-301833	T-IN2-RND2

A4